SECUMAX®

System is dedicated for side protection at the buildings edge. It secures people against falling down, secures circulation areas, excavations and dangerous areas. System consists of planks (barriers) or protection meshes, posts and grips depended on requirements of the construction.

Barrier post

REGISTERED DESIGN

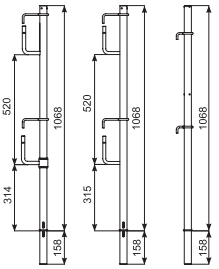

type 01 type 03 type 04

Barrier post (type 01 and type 03) is a base element of side protection system. Posts have automatic protection elements blocking themselfs inside grips. Posts are equiped with hooks for barriers installation (planks 32x150 mm) and moving protectors against accidental removing planks. Hook width is adjusted for connection of two planks with their 32 mm width each.

Post type 01 has rotable hook, post type 03 is equipped with stable hooks and type 4 has rotable hook only for protection meshes.

Symbol	Unit [pcs]	Weight [kg/pcs]	Article no.
Barrier post type 01	**1**	**3,96**	**BH-SX-00-1-00914**
Barrier post type 03	**1**	**3,20**	**BH-SX-00-1-29017**
Barrier post type 04	**1**	**2,61**	**BH-SX-00-1-29016**

Post extension

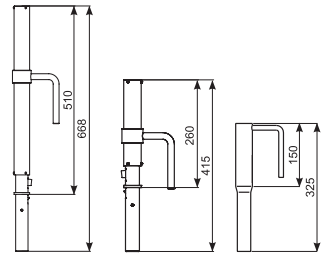

Symbol	Unit [pcs]	Weight [kg/pcs]	Article no.
Post extension 150	**1**	**1,10**	**BH-SX-00-0-00907**
Post extension 250	**1**	**2,00**	**BH-SX-00-0-00908**
Post extension 500	**1**	**2,84**	**BH-SX-00-0-00910**

REGISTERED DESIGN

Universal grip

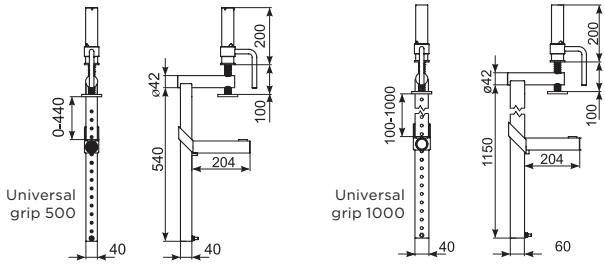

Symbol	Unit [pcs]	Weight [kg/pcs]	Article no.
Universal grip 500	**1**	**5,34**	**BH-SX-00-0-00938**
Universal grip 1000	**1**	**7,95**	**BH-SX-00-0-00939**

Universal bridge grip 1000

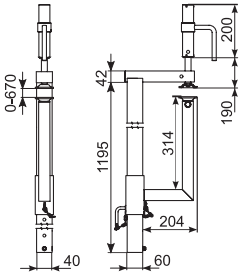

Symbol	Unit [pcs]	Weight [kg/pcs]	Article no.
Universal bridge grip 1000	**1**	**10,7**	**BH-SX-00-1-44031**

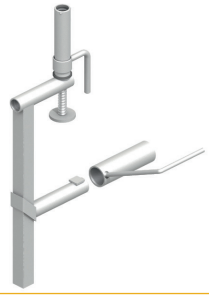

Stair catch for the universal grip

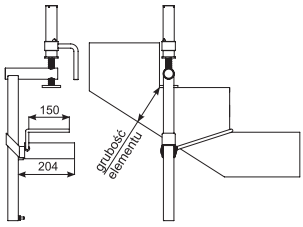

Symbol	Unit [pcs]	Weight [kg/pcs]	Article no.
Stair catch for the universal grip	**1**	**1,40**	**BH-SX-00-0-00949**
Stair catch 315 for the universal grip	**1**	**1,50**	**BH-SX-00-0-00951**

Kerb plank grip

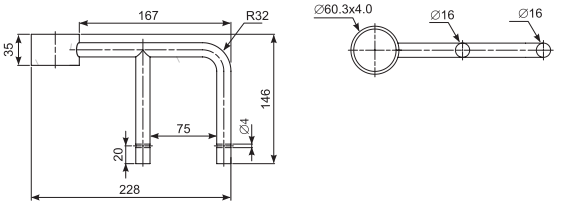

Symbol	Unit [pcs]	Weight [kg/pcs]	Article no.
Kerb plank grip	1	0,80	BH-SX-00-0-00919

Stay-in-place grip

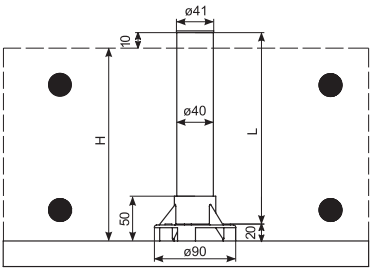

Symbol	Unit [pcs]	Weight [kg/pcs]	Article no.
Mounting seat	1	0,03/pcs	BH-SX-00-0-00896
Plastic pipe K 34/40	1* (2 lm)	0,35/lm	AS-DK-ST-0-00774
Cap K 34	1**	0,012/pcs	AS-DK-ST-0-43840

*Packaging: bunch 25 pcs (50 lm)
**Packaging: bag 500 pcs

Screw-in grip

REGISTERED DESIGN

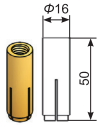

Sleeve anchor

Setting tool

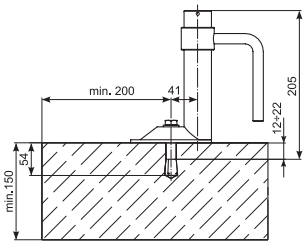

Symbol	Unit [pcs]	Weight [kg/pcs]	Article no.
Screw-in grip	1	1,74	BH-SX-00-0-00943
Sleeve anchor EA II M12x50	1	0,044	MO-MM-00-0-04405
EAW H12 plus setting tool	1	0,52	NA-NA-00-0-04798
SDS Plus 15/160 drill bit	1	0,1	NA-NA-00-0-04864

Screw-in bridge grip

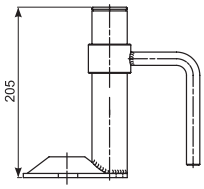

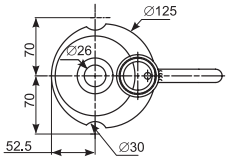

Symbol	Unit [pcs]	Weight [kg/pcs]	Article no.
Screw-in bridge grip	1	1,70	BH-SX-00-0-00946

Screw-in side grip

REGISTERED DESIGN

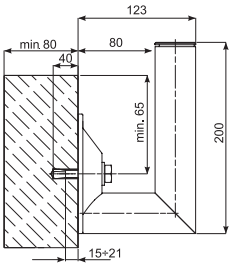

Symbol	Unit [pcs]	Weight [kg/pcs]	Article no.
Screw-in side grip	1	1,76	BH-SX-00-0-00944
FISCHER ZYKON FZEA II 14x40 M12 anchor	1	0,026	MO-MM-00-0-04409
FZED 14 plus setting tool	1	0,6	NA-NA-00-0-04800
FZUB 14x40 drill bit	1	0,184	NA-NA-00-0-04860

Side grip

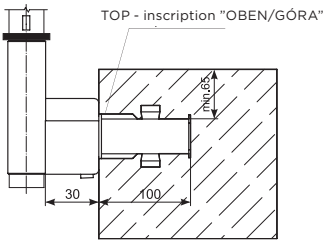

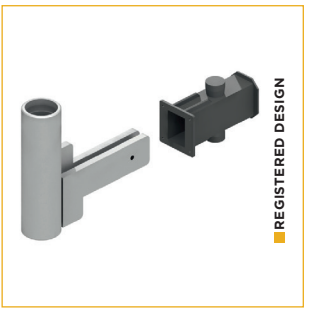

Symbol	Unit [pcs]	Weight [kg/pcs]	Article no.
Side grip	**1**	**1,12**	**BH-SX-00-0-00916**
Side grip seat	**1***	**0,04**	**BH-SX-00-0-00897**

***Packaging: bag 50 pcs**

Pneumatic side grip spanner

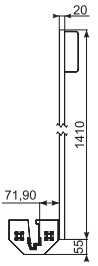

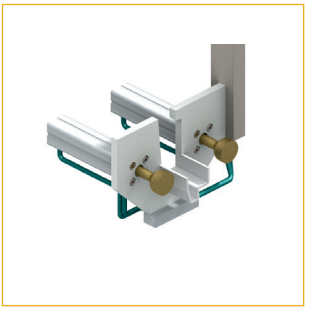

Symbol	Unit [pcs]	Weight [kg/pcs]	Article no.
Pneumatic side grip spanner	**1**	**3,00**	**BH-SX-00-0-05805**

Support pillar grip

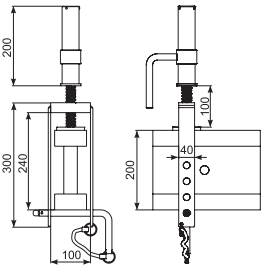

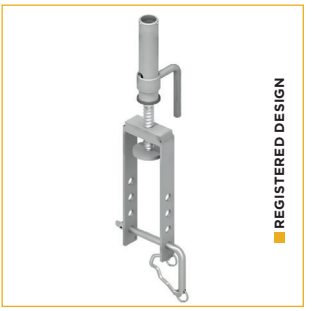

Symbol	Unit [pcs]	Weight [kg/pcs]	Article no.
Support pillar grip	**1**	**3,98**	**BH-SX-00-0-00930**

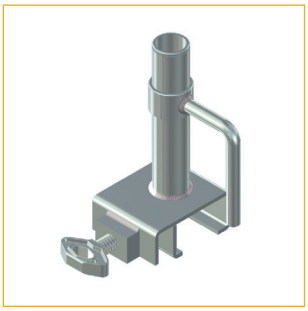

Screw-type pillar grip

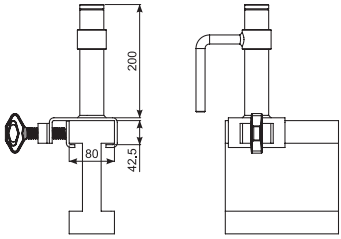

Symbol	Unit [pcs]	Weight [kg/pcs]	Article no.
Screw-type pillar grip	**1**	**2,80**	**BH-SX-00-0-00929**

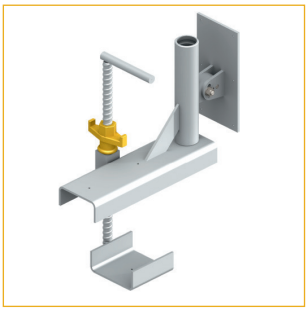

Formwork support pillar grip

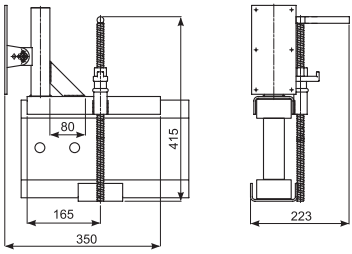

Symbol	Unit [pcs]	Weight [kg/pcs]	Article no.
Formwork support pillar grip	**1**	**5,50**	**BH-SX-00-0-00931**

Recommended grip spacing			
ceiling slab thickness [mm]	**150**	**200**	**300**
grip spacing [m]	**1**	**0,75**	**0,5**

Pipe wrench

The s-17 mm pipe wrench is used for the adjustment of mobile parts in the SECUMAX system grips – the type 650 adjustable formwork grip, the precast component grip, and in the SECUMAX RAIL system – the rail grip.

Symbol	Unit [pcs]	Weight [kg/pcs]	Article no.
Pipe wrench	**1**	**0,450**	**NA-NA-PR-0-04723**

Precast component grip

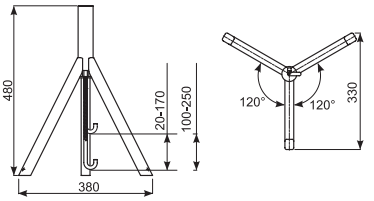

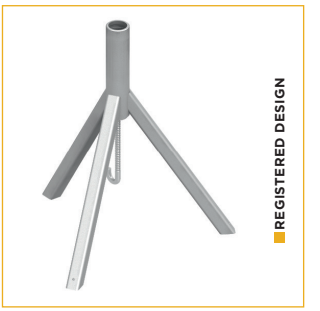

Symbol	Unit [pcs]	Weight [kg/pcs]	Article no.
Precast component grip	1	2,540	BH-SX-00-0-00924
Pipe wrench	1	0,450	NA-NA-PR-0-04723
Hook for pre-cast component grip 20-170 mm	1	0,18 - 0,27	BH-SX-00-0-01744

Formwork grip

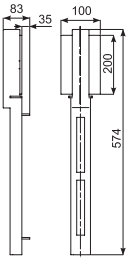

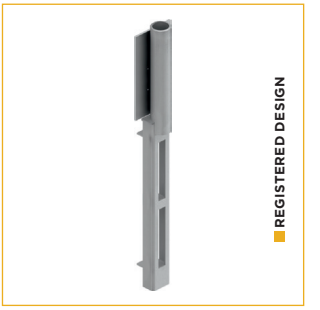

Symbol	Unit [pcs]	Weight [kg/pcs]	Article no.
Formwork grip	1	2,94	BH-SX-00-0-00926

ceiling slab thickness [mm]	150	200	300
recommended grip spacing [m]	1	0,75	0,5

Adjustable formwork grip

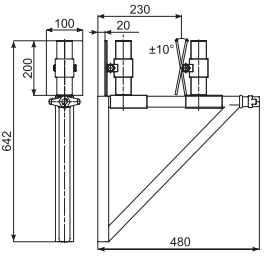

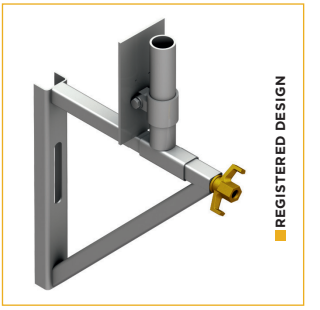

Symbol	Unit [pcs]	Weight [kg/pcs]	Article no.
Adjustable formwork grip	1	7,30	BH-SX-00-0-00922

ceiling slab thickness [mm]	150	200	300
recommended grip spacing [m]	1	0,75	0,5

Type 650 adjustable formwork grip

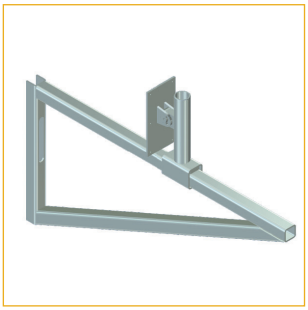

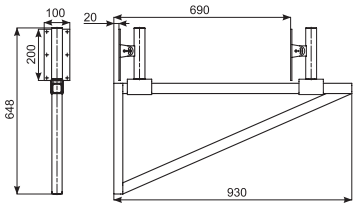

Symbol	Unit [pcs]	Weight [kg/pcs]	Article no.
Type 650 adjustable formwork grip	1	12,500	BH-SX-00-0-00923
Pipe wrench	1	0,450	NA-NA-PR-0-04723

ceiling slab thickness [mm]	150	200	300
recommended grip spacing	1	0,75	0,5

Elevator shaft grip

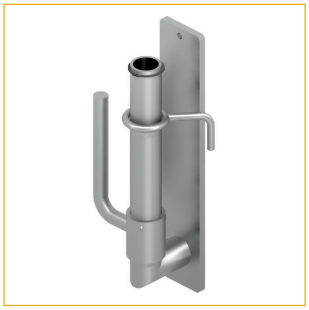

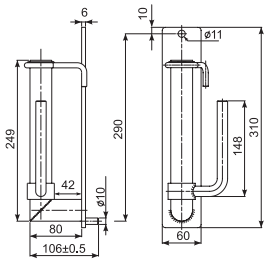

Symbol	Unit [pcs]	Weight [kg/pcs]	Article no.
Elevator shaft grip	1	2,50	BH-SX-00-0-00927
EA II M8x30 sleeve anchor	1	0,012	MO-MM-00-0-04406
EAW H8x30 plus setting tool	1	0,45	NA-NA-00-0-04799
SDS-Plus 10/160 drill bit	1	0,07	NA-NA-00-0-04873

Steel structure grip

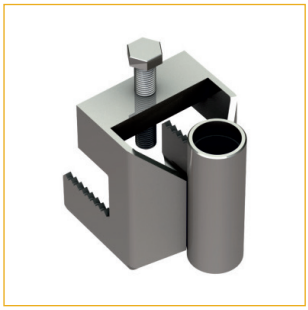

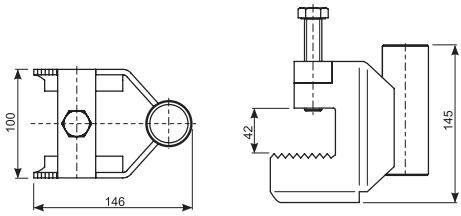

Symbol	Unit [pcs]	Weight [kg/pcs]	Article no.
Steel structure grip	1	2,10	BH-SX-00-0-00921

Sheet pile grip

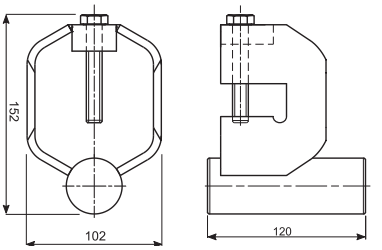

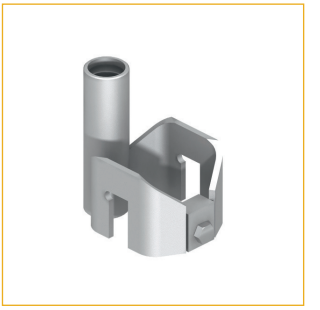

Symbol	Unit [pcs]	Weight [kg/pcs]	Article no.
Sheet pile grip	**1**	**1,42**	**BH-SX-00-0-00920**

Ram-in grip

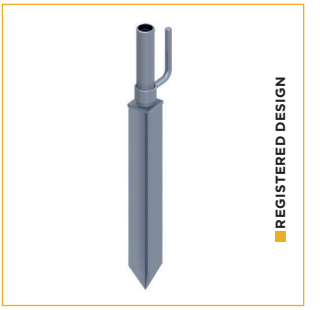

Symbol	Unit [pcs]	Weight [kg/pcs]	Article no.
Ram-in grip	**1**	**3,72**	**BH-SX-00-0-00941**
Ram-in grip mallet	**1**	**2,75**	**BH-SX-00-0-00905**

Counterweight grip

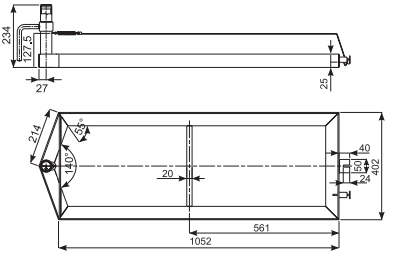

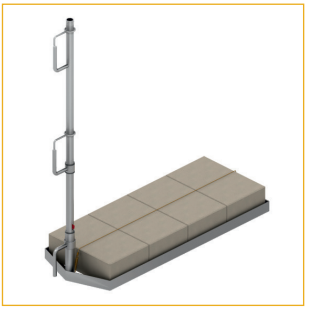

Symbol	Unit [pcs]	Weight [kg/pcs]	Article no.
Counterweight grip	**1**	**11,0**	**BH-SX-00-0-00936**

Vehicle board wall grip

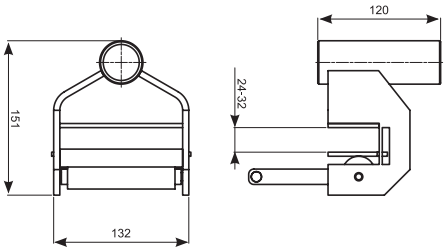

Symbol	Unit [pcs]	Weight [kg/pcs]	Article no.
Vehicle board wall grip	**1**	**2,70**	**BH-SX-00-0-23959**

Protective panel grip

PATENT PENDING

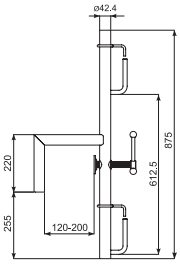

Symbol	Unit [pcs]	Weight [kg/pcs]	Article no.
Protective panel grip	**1**	**5,20**	**BH-SX-00-0-19665**

Foot grip

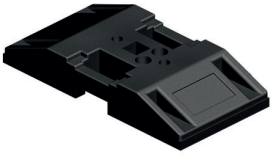

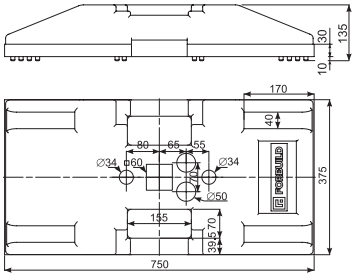

Symbol	Unit [pcs]	Weight [kg/pcs]	Article no.
Foot grip	**1**	**28**	**BH-SX-00-0-00937**

Clip grip

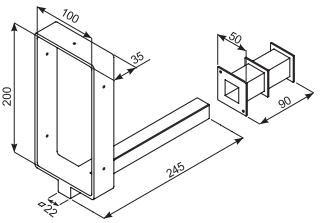

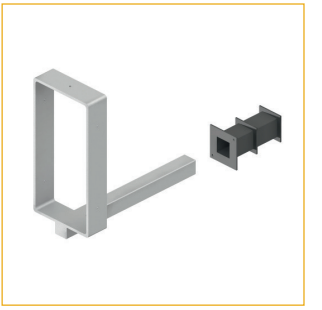

Symbol	Unit [pcs]	Weight [kg/pcs]	Article no.
Clip grip	1	1,71	BH-SX-00-0-00918
Clip seat	1*	0,02	BH-SX-00-0-00895

*Package: bag 50 pcs

Work platform grip

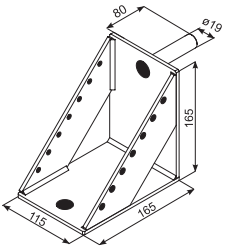

Symbol	Unit [pcs]	Weight [kg/pcs]	Article no.
Work platform grip	1	2,40	BH-SX-00-0-00934

Universal safety profile

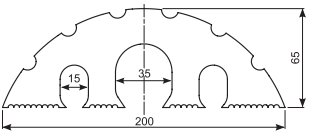

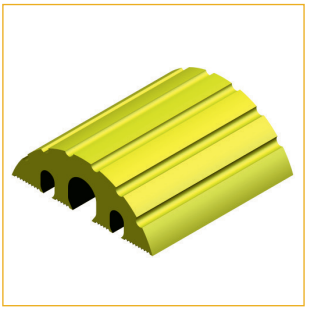

Symbol	Unit [pcs]	Weight [kg/pcs]	Article no.
Universal safety profile L=1500 mm	1	16,5	BH-SX-00-0-00948

Cable grip

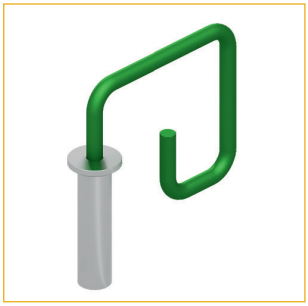

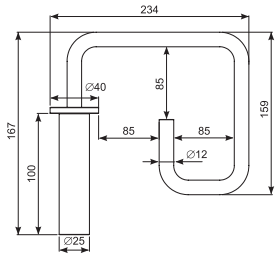

Symbol	Unit [pcs]	Weight [kg/pcs]	Article no.
Cable grip	**1**	**0,60**	**BH-SX-00-0-00925**

Safety net

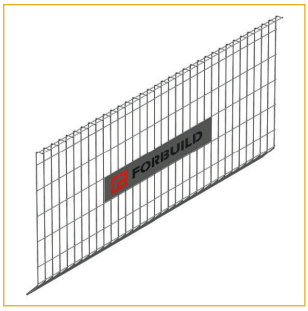

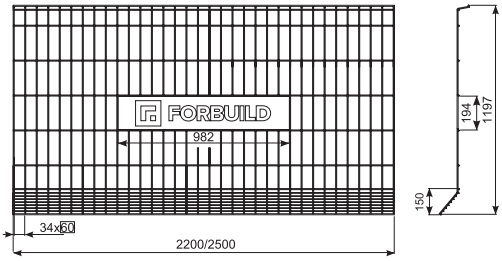

Symbol	Unit [pcs]	Weight [kg/pcs]	Article no.
Safety net 2200	**1**	**16,00**	**BH-SX-00-0-00912**
Safety net 2500	**1**	**19,00**	**BH-SX-00-0-23905**

Protective plank

Forbuild protective planks, used for safety handrails and kerb planks, are made of at least C-18 class wood, and have minimum dimensions of 32 x 150 x 2500 mm and 32 x 150 x 1500 mm. Upon request, the safety planks may have the company name placed on them. In order to estimate the number of planks for a required structure, the following formulae may be used:

A=(L/2)+1, where A - number of barrier pillars,
L - length of required structure in metres;

Should one want to use three planks for the structure:

X=(A-M)*3, where X - plank count, M - barrier count.

Should one want to use two planks for a structure (i. e. flights of stairs):

X=(A-M)*2, where X - plank count, M - barrier count.

Symbol	Unit [pcs]	Weight [kg/pcs]	Article no.
FORBUILD protective plank	**1**	**5,5-6,5**	**BH-SX-00-0-00894**
Protective plank with company logo	**1**	**5,5-6,5**	**-**

Transport container

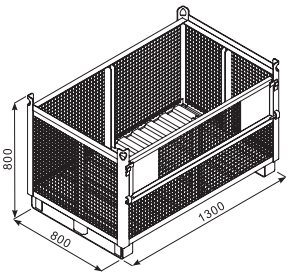

Symbol	Unit [pcs]	Weight [kg/pcs]	Article no.
Transport container	**1**	**71,6**	**BH-SX-00-0-00899**

Number of individual system components stored in the container	Quantity [pcs/container]
Barrier post	**100**
Post extension 150	**600**
Post extension 250	**350**
Post extension 500	**200**
Universal grip	**70**
Universal grip 1000	**30**
Side grip	**600**
Formwork support pillar grip	**50**
Support pillar grip	**100**
Screw-in grip	**250**
Ram-in grip	**150**
Precast component grip	**60**
Sheet pile grip	**250**
Screw-in side grip	**250**
Adjustable formwork grip	**30**
Formwork grip	**140**
Work platform grip	**200**
Screw-in bridge grip	**250**
Elevator shaft grip	**300**
Kerb plank grip	**600**
Cable grip	**600**
Stair catch	**300**
Clip grip	**300**

The transport container is used to transport, store and secure SECUMAX edge protection system components. The container structure allows transport of parts weighing up to 1200 kg in total. The container base rests on two support feet, which simplifies setting it up on the ground, even if the ground area is not level.

In addition, these feet allow transporting the container using a forklift and stacking the containers in a warehouse. In the corners, eyes were installed, allowing transport with a hoisting device using a sling. One container side is a swing-away wall, allowing easier access to the components stored inside.

The container bottom is made of profiled sheet steel, and the side walls are made of mesh. Internal reinforcement ribs (placed at each container side walls) allow division of the container into smaller spaces, thanks to which diverse system components can be stored in the same container.

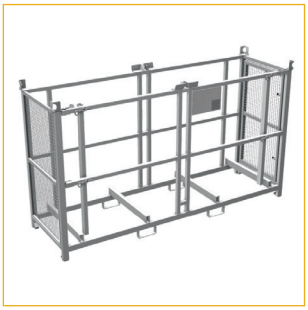

Transport container for planks and meshes

Capacity of container for planks and meshes	Quantity [pcs/ container
Planks	**148**
Meshes	**29**

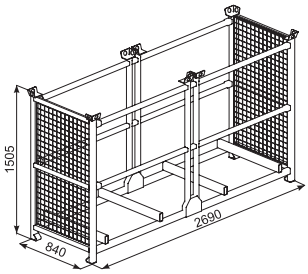

The container has a lightweight construction with a removable front panel. This gives opportunity for quick loading and unloading of elements. The product can be transported using a forklift or other transportation maschine.

System containers have been designed to give opportunity for storing and transportation togather. Two SECUMAX transport baskets can be stacked side by side on the transport container for boards and nets.

Baskets on which other baskets are placed should be filled with Secumax elements.Filled baskets can only be moved separatly.

Symbol	Unit [pcs]	Weight [kg/pcs]	Article no.
Transport container for planks and meshes	**1**	**181**	**BH-SX-00-0-00901**

PVC cover for reinforcement bars

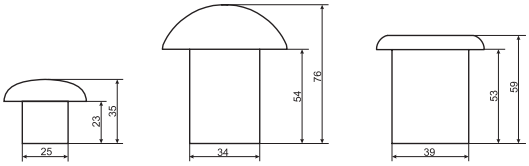

Symbol	Quantity in the bag [pcs]	Weight [kg/pcs]	Article no.
PVC cover for reinforcement bars D8/16 mm	**250**	**0,008**	**BH-SX-00-0-00904**
PVC cover for reinforcement bars D16/32 mm	**125**	**0,035**	**BH-SX-00-0-00903**
PVC cover for reinforcement bars D8/36 mm	**250**	**0,025**	**BH-SX-00-0-23587**

PVC batten for reinforcement bars

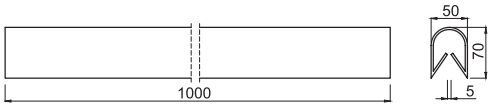

Symbol	Unit [pcs]	Weight [kg/pcs]	Article no.
PVC batten for reinforcement bars	**1**	**0,81**	**BH-SX-00-0-06750**
Steel-core PVC batten for reinforcement bars	**1**	**1,60**	**BH-SX-00-0-06751**